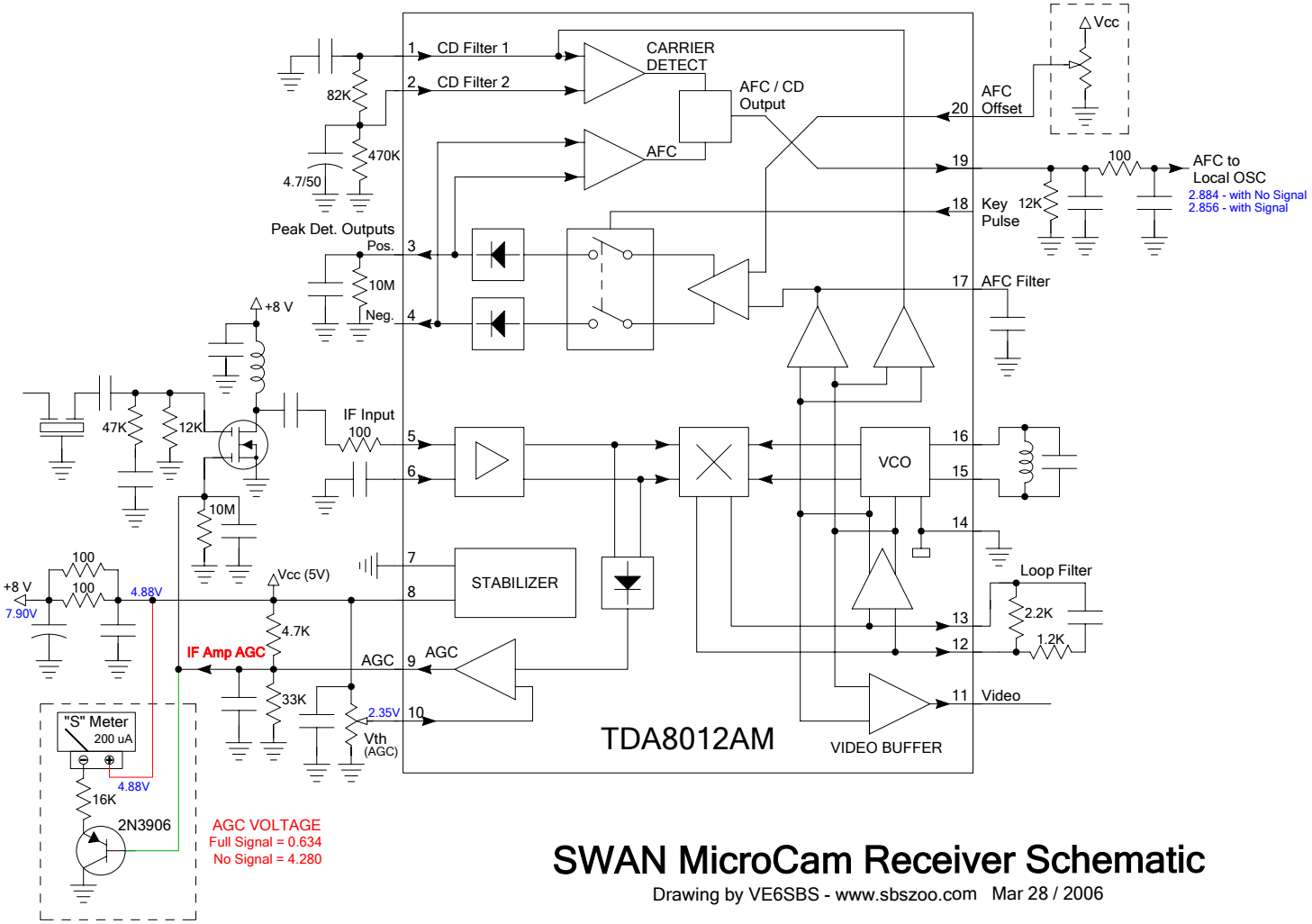

SWAN MicroCam Receiver Schematic

Drawing by VE6SBS - www.sbszoo.com Mar 28 / 2006