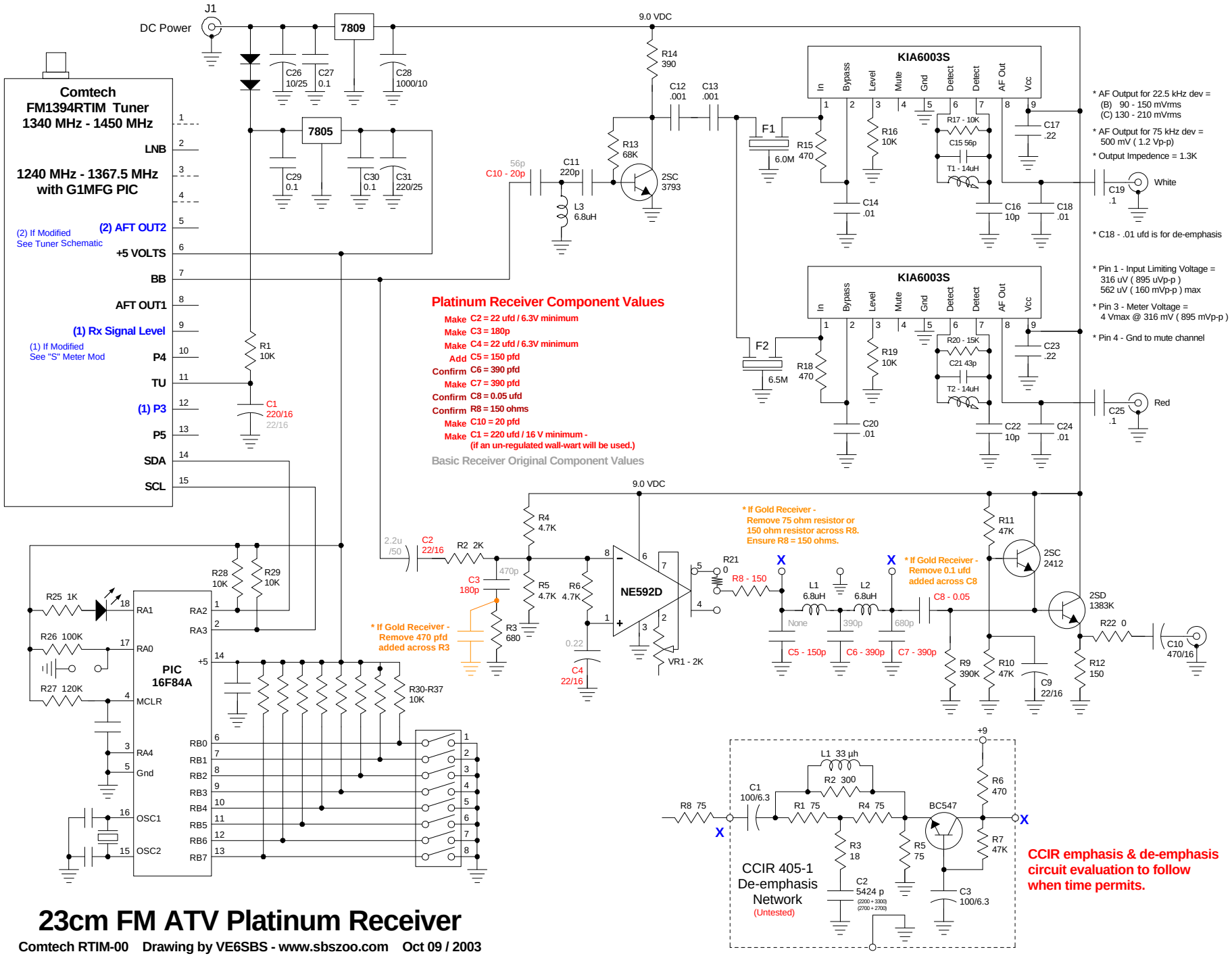

23cm FM ATV Platinum Receiver

Comtech RTIM-00 Drawing by VE6SBS - www.sbszoo.com Oct 09 / 2003